HEXONIC | HEAT EXCHANGERS

D.COOL

DRY COOLERS

DRY COOLERS

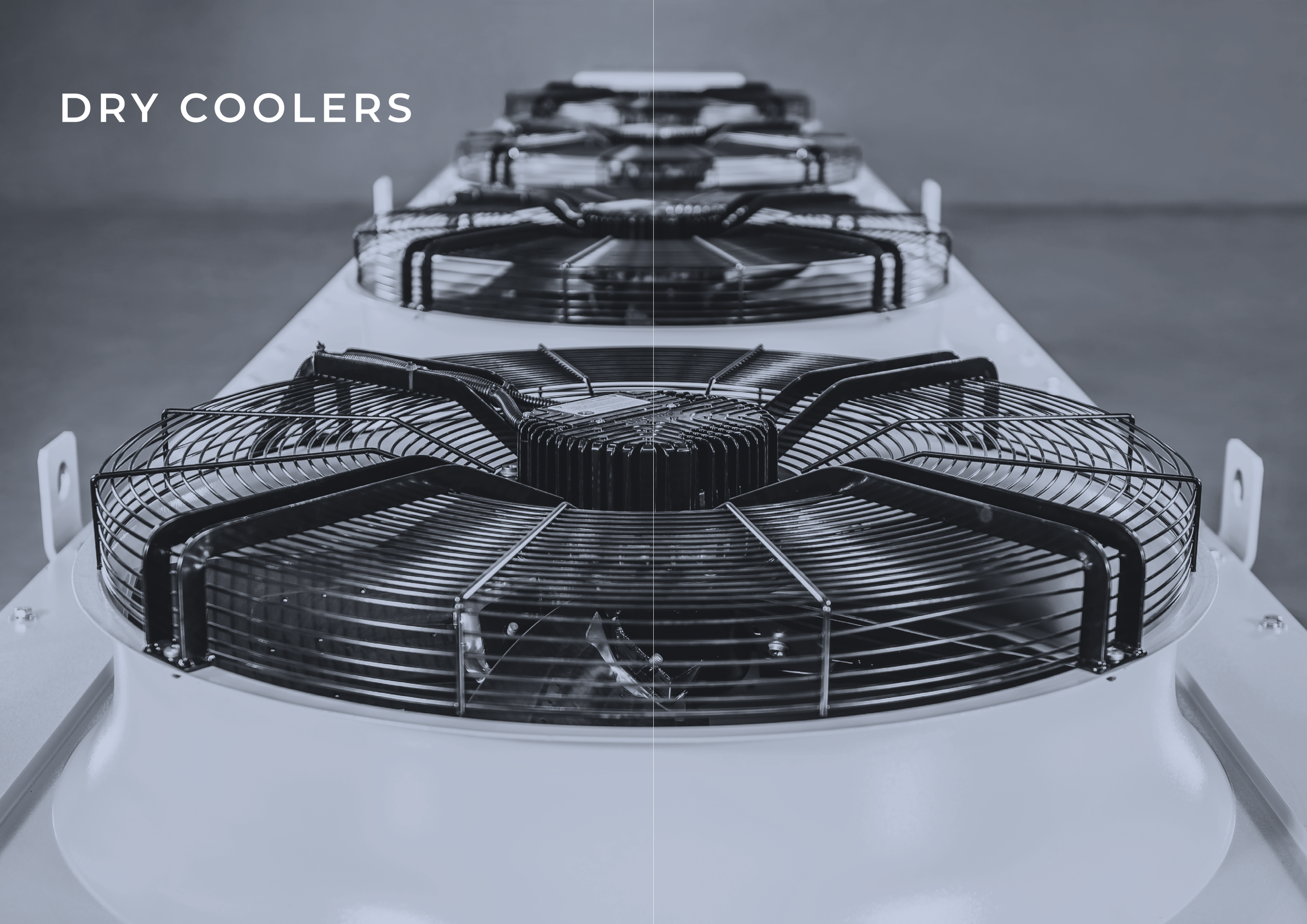

DRY COOLERS

INDUSTRIAL COOLING SYSTEMS, AIR CONDITIONING

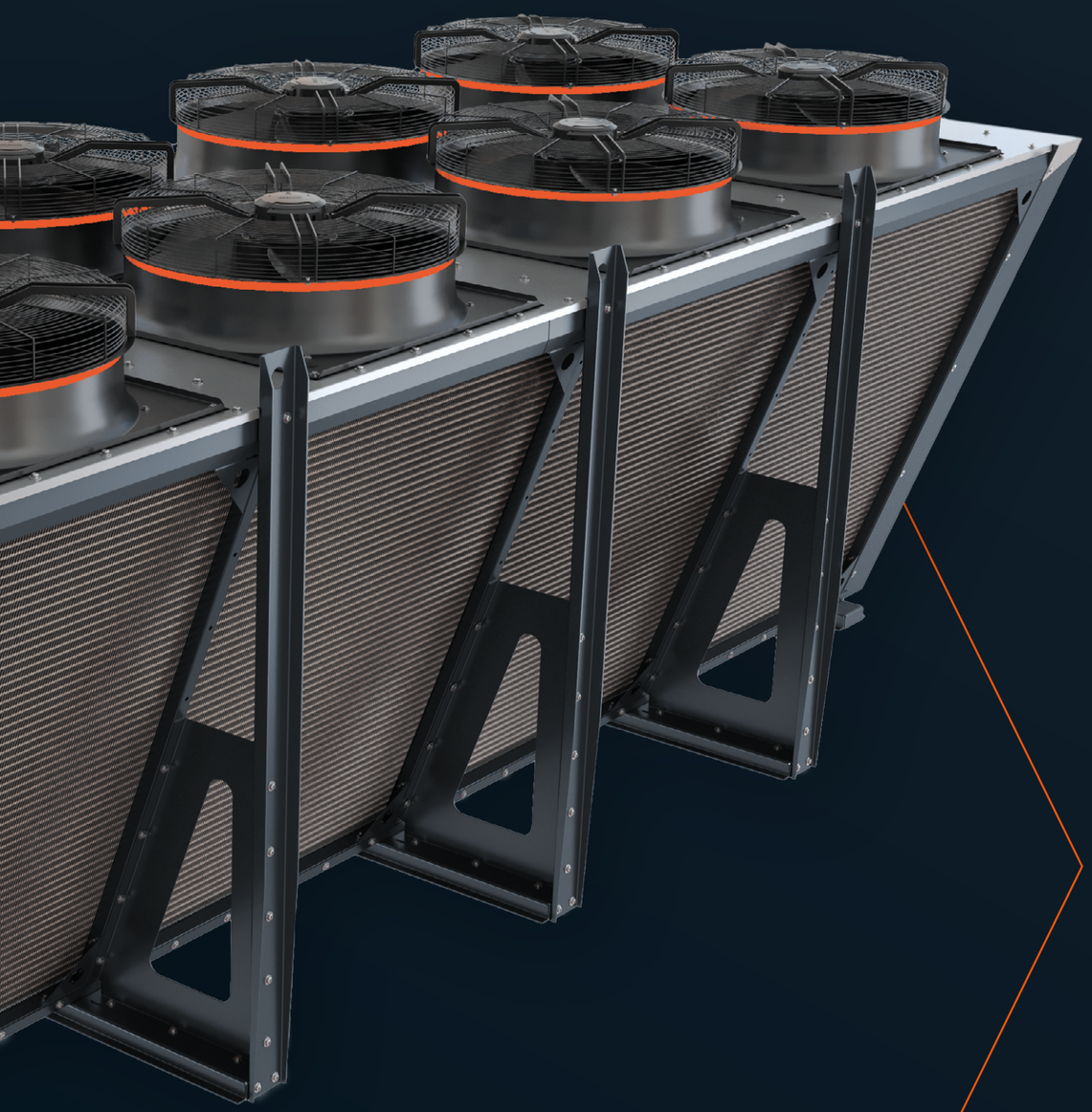

WHY CHOOSE HEXONIC DRY COOLERS?

ADVANTAGES

- EFFICIENT COOLING METHOD
- ABILITY TO USE VARIOUS MEDIA
- CHEAPEST WASTE HEAT DISPERSION METHOD
- HIGH DURABILITY OF THE KEY COMPONENTS
- HIGH PERFORMANCE AT MINIMUM POWER CONSUMPTION
- AVAILABLE IN THREE COLOR VERSIONS
- CLOSED-CIRCUIT SYSTEM OPERATION
- LOW NOISE LEVEL: STARTING FROM <40 DB

APPLICATION

- DATA CENTRE COOLING SYSTEMS
- HEAT AND POWER PLANTS
- INDUSTRIAL PROCESSES
- RENEWABLE ENERGY
- BIOGAS PLANTS
- LARGE VOLUME AIR CONDITIONING SYSTEMS

FANS

HIGH EFFICIENCY, LOW DECIBEL AXIAL FANS WITH LOW MAINTENANCE

PROTECTIVE FAN COVERS CONFORMING TO EN294

ø800 MM AND ø910 MM
(ø31.5 IN AND ø35.8 IN)

COMPLIANT WITH ERP 2015 DIRECTIVE

EC AND AC MOTORS

STARTING FROM >40 DB(A)

LOW ACOUSTIC INTENSITY

30%

LOWER ENERGY USE

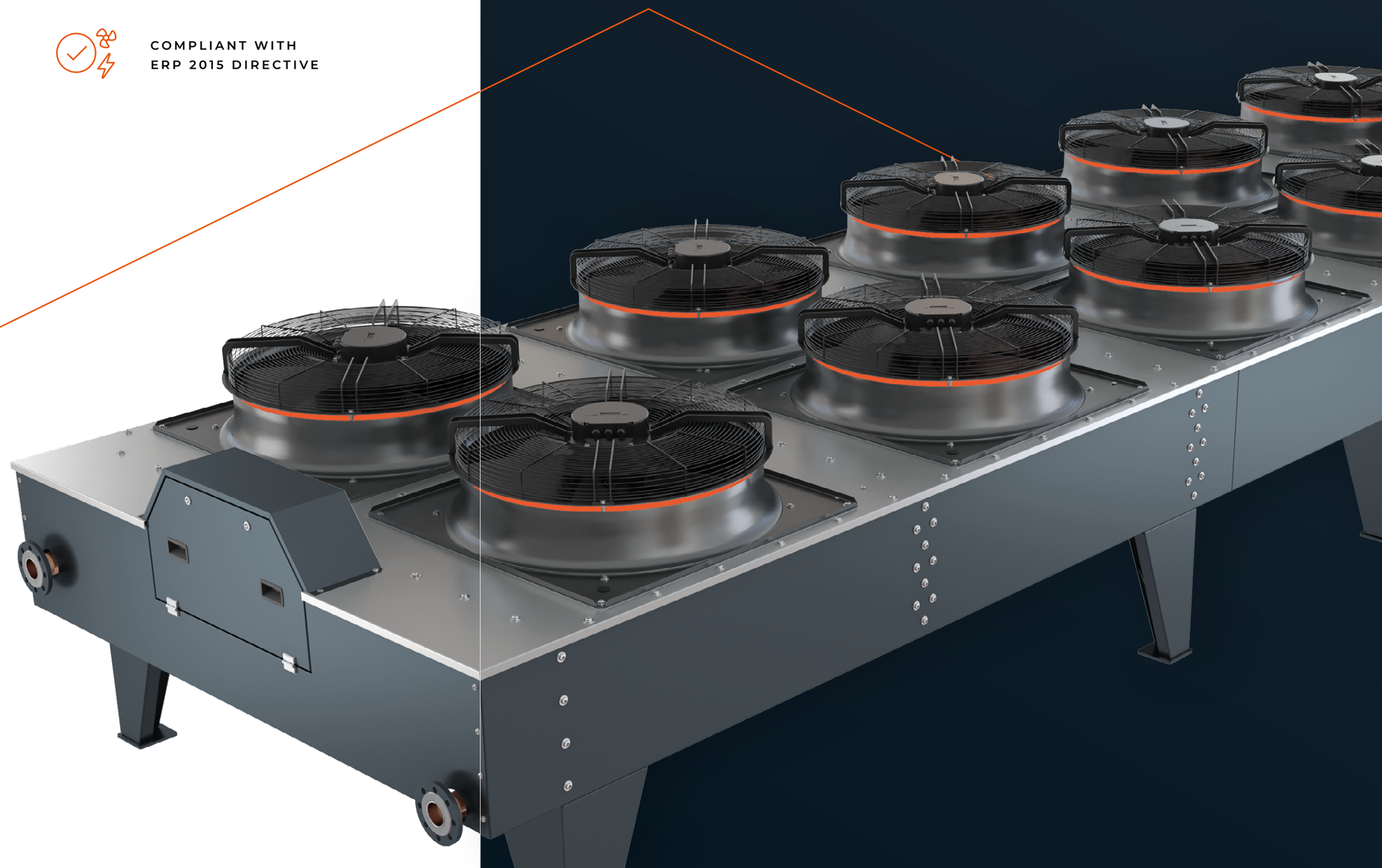

ROBUSTNESS

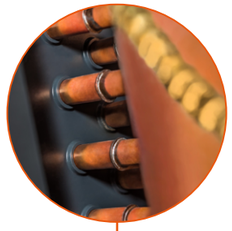

- COPPER TUBES Ø 12 MM (0.47 IN)
- BAFFLE – TUBE STABILIZING SYSTEM FOR THE INCREASE IN THE SERVICE LIFE OF THE DEVICE
- COPPER COMPONENTS SOLDERED WITH HIGH SILVER CONTENT SOLDER

CASING MADE OF THICK CARBON STEEL COATED WITH ZINC (ZINTEC), WET PAINTED OR POWDER COATED

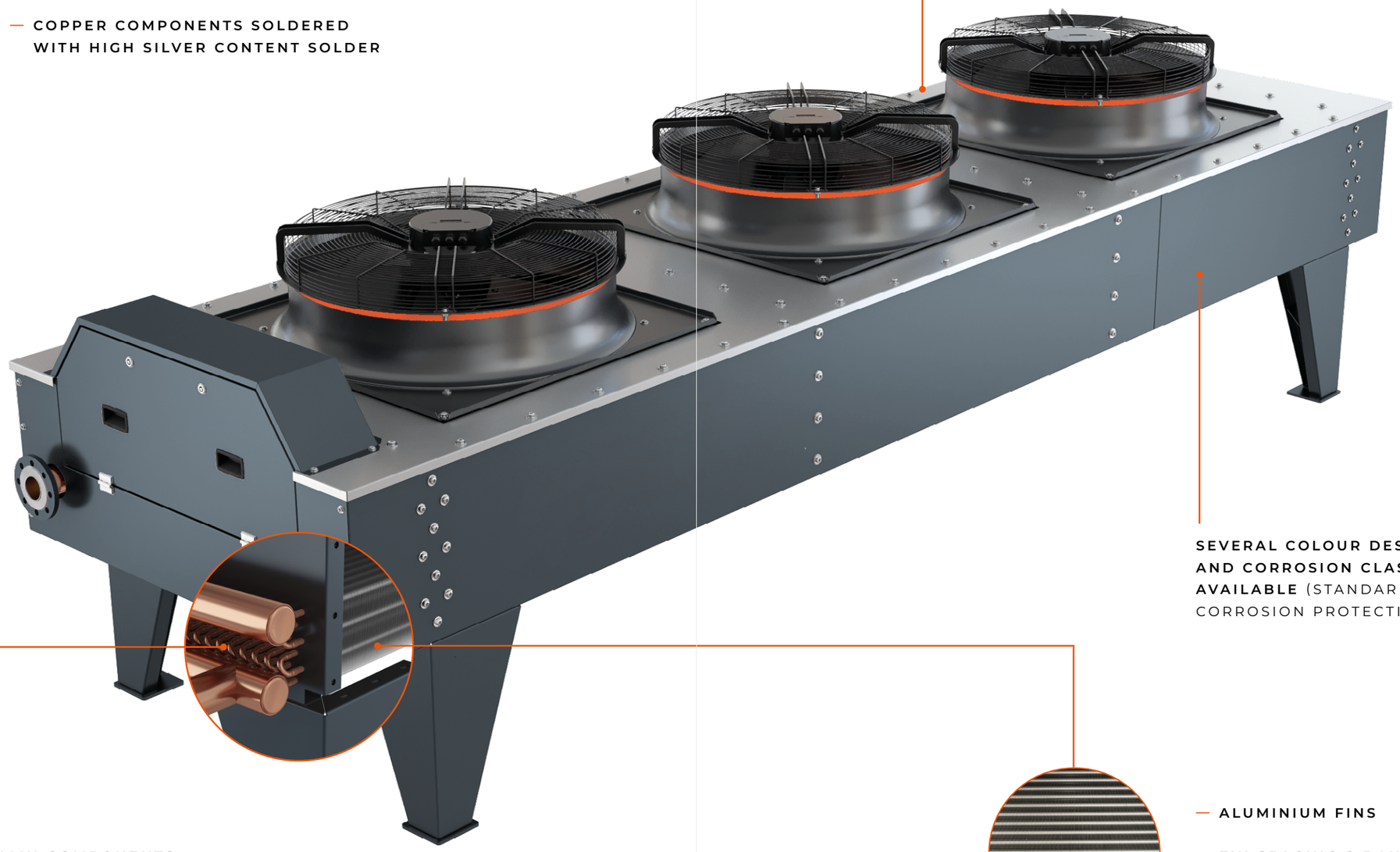

SEVERAL COLOUR DESIGNS AND CORROSION CLASSES AVAILABLE (STANDARD C3 CORROSION PROTECTION CLASS)

HIGH DURABILITY OF MAIN COMPONENTS, SUCH AS HEAT EXCHANGER, CASING, FANS AND ELECTRONICS

- ALUMINIUM FINS
- FIN SPACING 2,5 MM, 2,3 MM OR 2,5 MM (0.83”, 0.91” OR 0.98”) DEPENDING ON APPLICATION

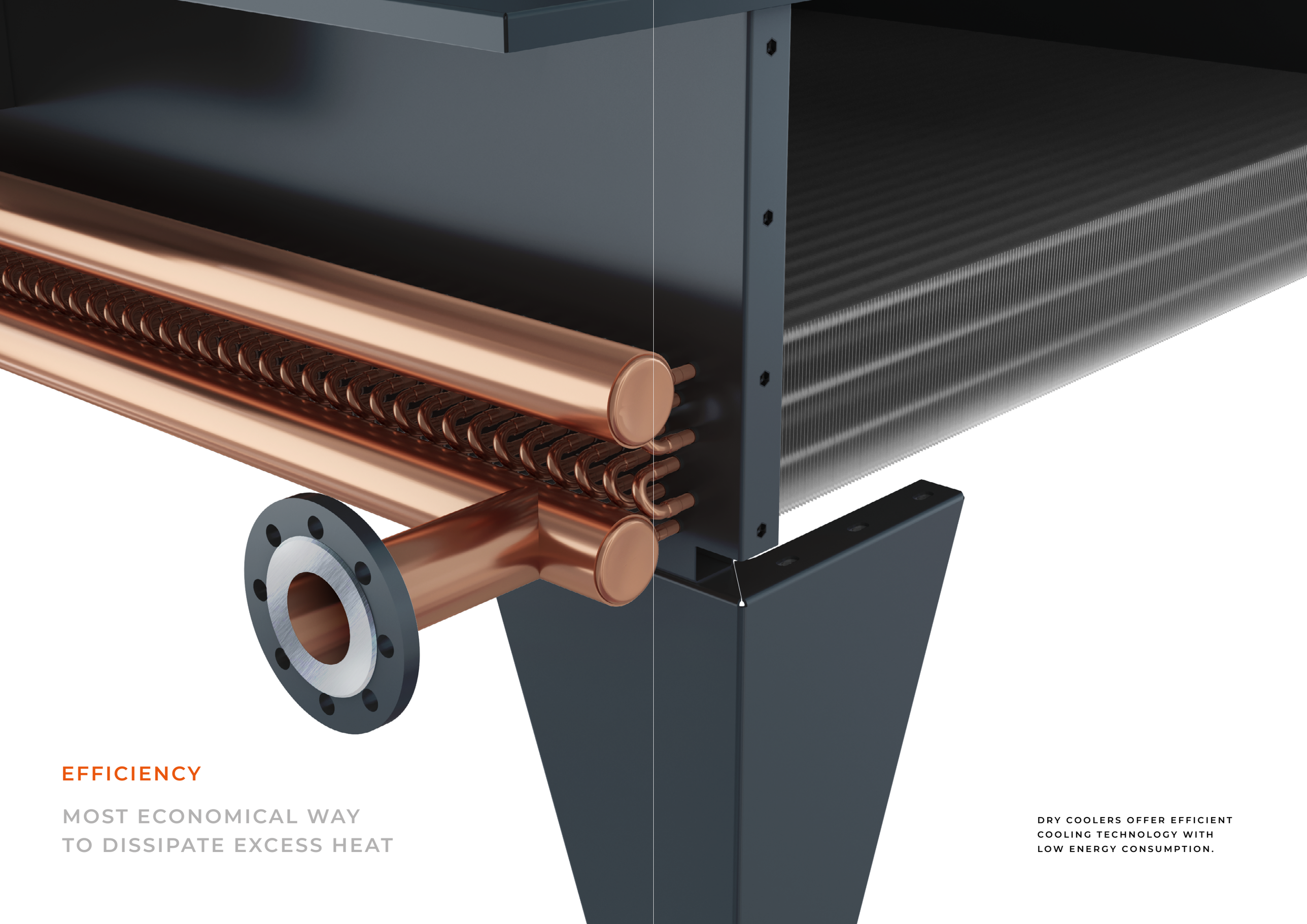

EFFICIENCY

MOST ECONOMICAL WAY
TO DISSIPATE EXCESS HEAT

DRY COOLERS OFFER EFFICIENT COOLING TECHNOLOGY WITH LOW ENERGY CONSUMPTION.

DESIGNED TO SPECIFIC NEEDS

- WEATHERPROOF ELECTRICAL CABINET
- ON/OFF SWITCH
- PID CONTROLLER WITH FREQUENCY CONVERTER
- PID CONTROLLER FOR EC FANS
- PLC CONTROLLER WITH TOUCHSCREEN
- OFF SWITCHES FOR INDIVIDUAL FANS
- ADIABATIC COOLING SYSTEM
- VIBRATION DAMPERS TO ABSORB VIBRATIONS OF THE DEVICE
- EXTENDED LEGS 1000 MM OR 1200 MM (39.4” OR 47.2”)
- INSPECTION FAN COVERS

STANDARD

RAL 7035

SILVER

RAL 9006

ANTHRACITE

RAL 7016 AND RAL 9006

THE ADIABATIC SYSTEM

Allows the operation of the dry cooler even when the ambient temperature is higher than the temperature of the process medium.

It increases the relative humidity of the air, thus lowering its temperature.

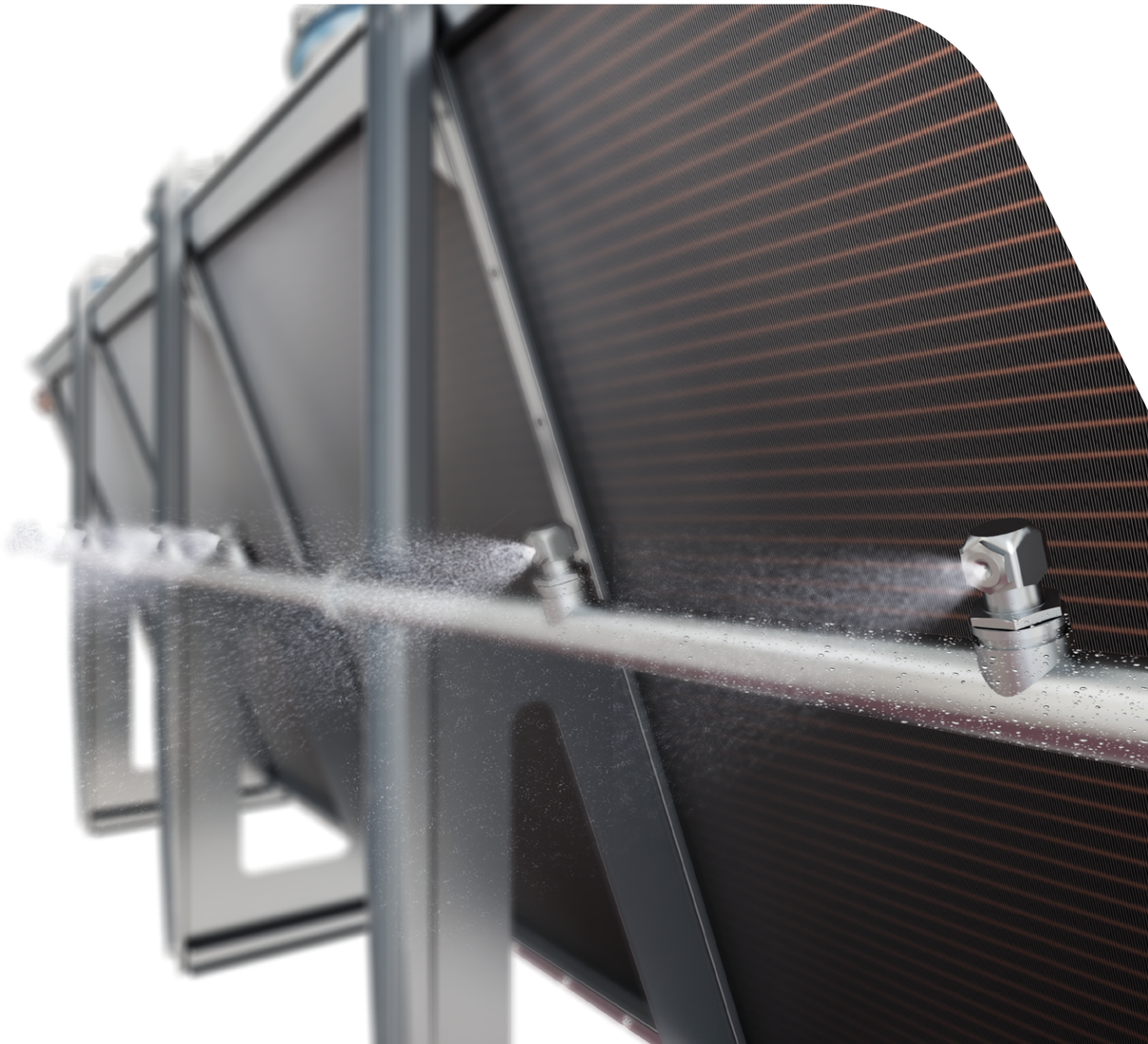

SDF – H – N / SDF – H – S

HORIZONTAL MODELS

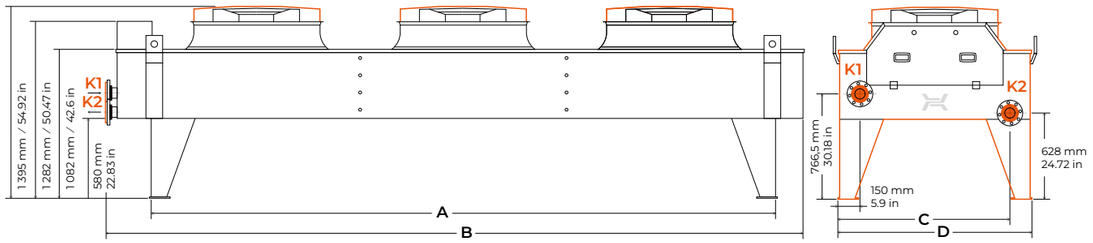

TECHNICAL PARAMETERS

Type	Dimensions							
	A		B		C		D	
	mm	in	mm	in	mm	in	mm	in
SDF-H-N 1×1	1 551	61	2 080	82	1 240	49	1 390	55
SDF-H-N 2×1	3 051	120	3 585	141	1 240	49	1 390	55
SDF-H-N 3×1	4 552	179	5 085	200	1 240	49	1 390	55
SDF-H-N 4×1	6 052	238	6 585	259	1 240	49	1 390	55
SDF-H-N 5×1	7 552	297	8 085	318	1 240	49	1 390	55
SDF-H-N 6×1	9 053	356	9 585	377	1 240	49	1 390	55
SDF-H-N 7×1	10 553	415	11 085	436	1 240	49	1 390	55
SDF-H-N 1×2	1 551	61	2 080	82	2 190	86	2 340	92
SDF-H-N 2×2	3 051	120	3 585	141	2 190	86	2 340	92
SDF-H-N 3×2	4 552	179	5 085	200	2 190	86	2 340	92
SDF-H-N 4×2	6 052	238	6 585	259	2 190	86	2 340	92
SDF-H-N 5×2	7 552	297	8 085	318	2 190	86	2 340	92
SDF-H-N 6×2	9 053	356	9 585	377	2 200	87	2 350	93
SDF-H-N 7×2	10 553	415	11 085	436	2 200	87	2 350	93
SDF-H-S 1×1	1 301	51	1 830	72	1 080	43	1 230	48
SDF-H-S 2×1	2 551	100	3 080	121	1 080	43	1 230	48
SDF-H-S 3×1	3 802	150	4 330	170	1 080	43	1 230	48
SDF-H-S 4×1	5 052	199	5 585	220	1 080	43	1 230	48
SDF-H-S 5×1	6 303	248	6 835	269	1 080	43	1 230	48

* Spacing between outer legs of the dry cooler. Number of legs depend on a type of dry cooler.

All dimensions and technical data are approximate only and may be changed without further notice.

SDV – H – N

V MODELS

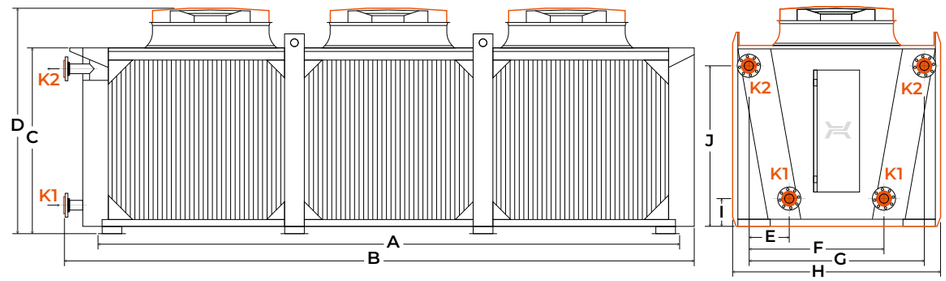

TECHNICAL PARAMETERS

Type	Dimensions																			
	A		B		C		D		E		F		G		H		I		J	
	mm	in	mm	in	mm	in	mm	in	mm	in	mm	in	mm	in	mm	in	mm	in	mm	in
SDV-H-N 1×1	1 627	64	2 015	79	1 490	59	1 830	72	334	13	1 113	44	1 447	57	1 712	67	228	9	1 322	52
SDV-H-N 2×1	3 145	124	3 530	139	1 490	59	1 830	72	334	13	1 113	44	1 447	57	1 712	67	228	9	1 322	52
SDV-H-N 3×1	4 660	183	5 050	199	1 490	59	1 830	72	334	13	1 113	44	1 447	57	1 712	67	228	9	1 322	52
SDV-H-N 4×1	6 125	241	6 565	258	1 490	59	1 830	72	334	13	1 113	44	1 447	57	1 712	67	228	9	1 322	52
SDV-H-N 5×1	7 690	303	8 080	318	1 490	59	1 830	72	334	13	1 113	44	1 447	57	1 712	67	228	9	1 322	52
SDV-H-N 6×1	9 205	362	9 600	378	1 490	59	1 830	72	334	13	1 113	44	1 447	57	1 715	68	228	9	1 322	52
SDV-H-N 7×1	10 720	422	11 115	438	1 490	59	1 830	72	334	13	1 113	44	1 447	57	1 715	68	228	9	1 322	52
SDV-H-N 1×2	1 627	64	2 015	79	2 062	81	2 400	94	738	29	1 350	53	2 088	82	2 390	94	250	10	1 872	74
SDV-H-N 2×2	3 145	124	3 530	139	2 062	81	2 400	94	738	29	1 350	53	2 088	82	2 390	94	250	10	1 872	74
SDV-H-N 3×2	4 660	183	5 050	199	2 062	81	2 400	94	738	29	1 350	53	2 088	82	2 390	94	250	10	1 872	74
SDV-H-N 4×2	6 125	241	6 565	258	2 062	81	2 400	94	738	29	1 350	53	2 088	82	2 390	94	250	10	1 872	74
SDV-H-N 5×2	7 690	303	8 080	318	2 062	81	2 400	94	738	29	1 350	53	2 088	82	2 390	94	250	10	1 872	74
SDV-H-N 6×2	9 205	362	9 600	378	2 062	81	2 400	94	738	29	1 350	53	2 088	82	2 390	94	250	10	1 872	74
SDV-H-N 7×2	10 720	422	11 115	438	2 062	81	2 400	94	738	29	1 350	53	2 088	82	2 390	94	250	10	1 872	74

* Spacing between outer legs of the dry cooler. Number of legs depend on a type of dry cooler.

All dimensions and technical data are approximate only and may be changed without further notice.

SDF – V – N

VERTICAL MODELS

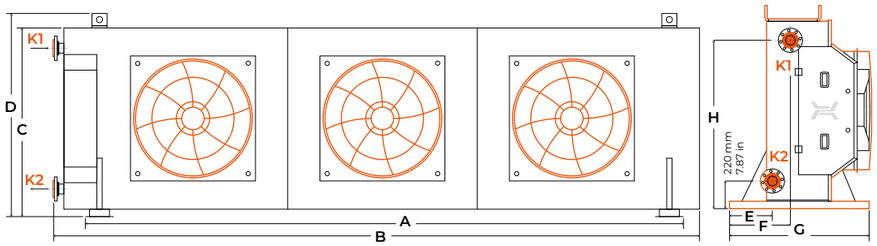

TECHNICAL PARAMETERS

Type	Dimensions															
	A		B		C		D		E		F		G		H	
	mm	in	mm	in	mm	in	mm	in	mm	in	mm	in	mm	in	mm	in
SDF-V-N 1×1	1 721	68	2 080	82	1 468	58	1 585	62	348	14	487	19	1 100	43	1 310	52
SDF-V-N 2×1	3 221	127	3 585	141	1 468	58	1 585	62	348	14	487	19	1 100	43	1 310	52
SDF-V-N 3×1	4 722	186	5 058	199	1 468	58	1 585	62	348	14	487	19	1 100	43	1 310	52
SDF-V-N 4×1	6 222	245	6 585	259	1 468	58	1 585	62	348	14	487	19	1 100	43	1 310	52
SDF-V-N 5×1	7 723	304	8 085	318	1 468	58	1 585	62	348	14	487	19	1 100	43	1 310	52
SDF-V-N 6×1	9 223	363	9 585	377	1 468	58	1 585	62	348	14	487	19	1 100	43	1 310	52
SDF-V-N 7×1	10 723	422	11 085	436	1 468	58	1 585	62	348	14	487	19	1 100	43	1 310	52
SDF-V-N 1×2	1 721	68	2 080	82	2 428	96	2 545	100	598	24	737	29	1 600	63	2 270	89
SDF-V-N 2×2	3 221	127	3 585	141	2 428	96	2 545	100	598	24	737	29	1 600	63	2 270	89
SDF-V-N 3×2	4 722	186	5 058	199	2 428	96	2 545	100	598	24	737	29	1 600	63	2 270	89
SDF-V-N 4×2	6 222	245	6 585	259	2 428	96	2 545	100	598	24	737	29	1 600	63	2 270	89
SDF-V-N 5×2	7 723	304	8 085	318	2 428	96	2 545	100	598	24	737	29	1 600	63	2 270	89
SDF-V-N 6×2	9 223	363	9 585	377	2 428	96	2 545	100	598	24	737	29	1 600	63	2 270	89
SDF-V-N 7×2	10 723	422	11 085	436	2 428	96	2 545	100	598	24	737	29	1 600	63	2 270	89

* Spacing between outer legs of the dry cooler. Number of legs depend on a type of dry cooler.

All dimensions and technical data are approximate only and may be changed without further notice.

WORKING PARAMETERS

MIN. ALLOWABLE TEMPERATURE
OF THE PROCESS LIQUID
— -20°C / -4°F

MAX. ALLOWABLE TEMPERATURE
OF THE PROCESS LIQUID
— 100°C / 212°F

MAX. ALLOWABLE PRESSURE
OF THE PROCESS LIQUID
— 10 BAR / 145 PSI

EXEMPLAR DESIGNATION

SDF-H-N-6A35-1X2-91E-50D-LL

SD – Hexonic Dry Cooler
F – flat
V – vertical

H – horizontal
V – vertical

N – normal, single module length 1500 mm (59")
S – slim, single module length 1250 mm (49.2")

geometry of the heat exchanger

number of fans, e.g. 1 in series × 2 in parallel (wider than longer)

fan diameter in cm (80 or 91 cm / 31.5" or 35.8")

50 – frequency 50Hz
D – delta 400V
Y – star 400V
J – single phase 230V
E – EC direct current motor

sound intensity:
LL – very low
L – low
M – medium
N – regular

hexonic.com

EN.ver.1.2024